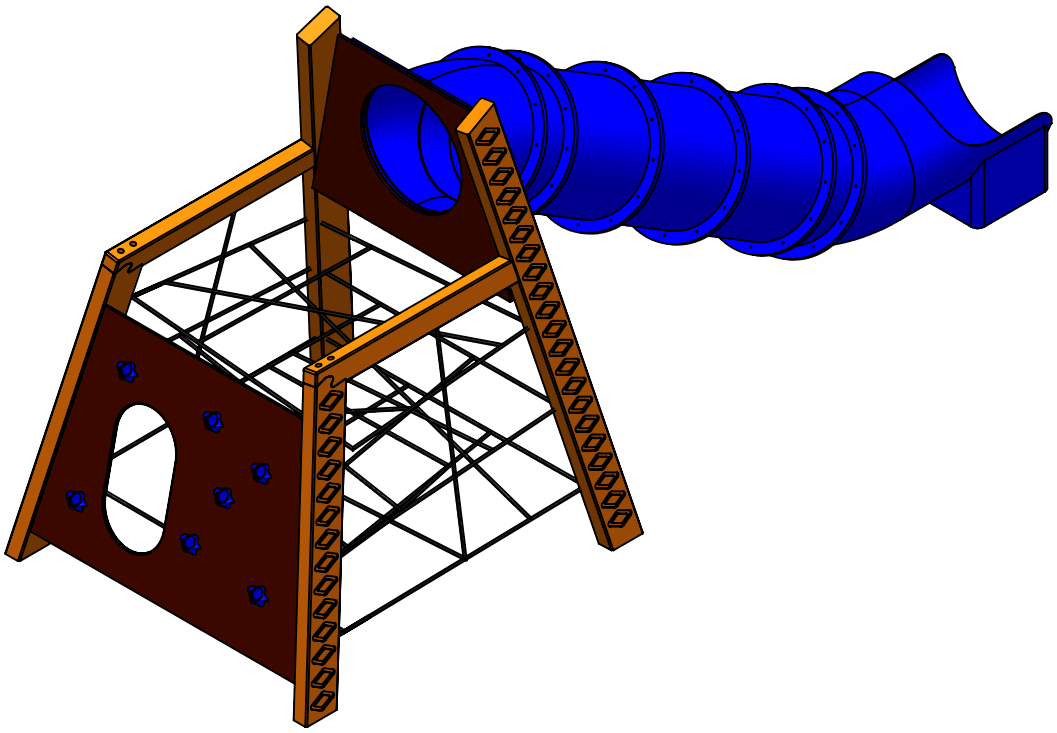

UNLESS OTHERWISE SPECIFIED:
DIMENSIONS ARE IN MILLIMETERS
WEIGHT ARE IN KILOGRAMM

	NAME	SIGNATURE	DATE	REVISION
DRAWN	M. Rebase		18.05.2012	
APPV'D				

Tiptiptap OÜ

Tiptiptap OÜ
Veetorni 9,
Jüri alevik, Rae vald,
75301 Harjumaa

PART NUMBER / DWG NO.:
AM005

DESCRIPTION:
AMAZON

MATERIAL:
wood, metal, plastic

A4

WEIGHT:

SCALE: 1:40

SHEET 1 OF 6

safety area

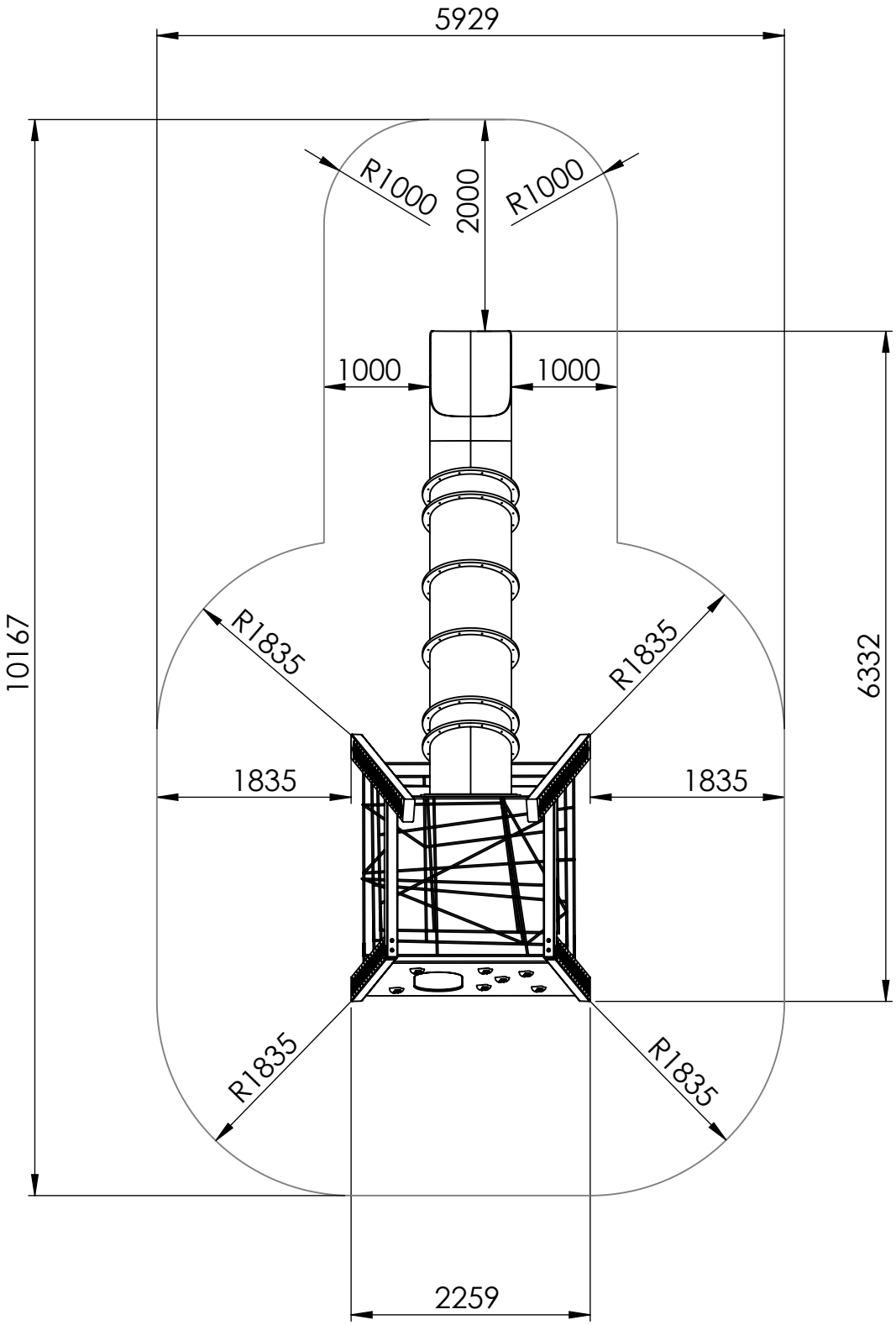

UNLESS OTHERWISE SPECIFIED:
DIMENSIONS ARE IN MILLIMETERS
WEIGHT ARE IN KILOGRAMM

	NAME	SIGNATURE	DATE	REVISION
DRAWN	M. Rebase		18.05.2012	
APPV'D				

Tiptiptap OÜ
Veetorni 9,
Jüri alevik, Rae vald,
75301 Harjumaa

PART NUMBER / DWG NO.: AM005

DESCRIPTION: AMAZON safety area

MATERIAL: wood, metal, plastic

A4

WEIGHT:

SCALE: 1:60

SHEET 2 OF 6

foundation

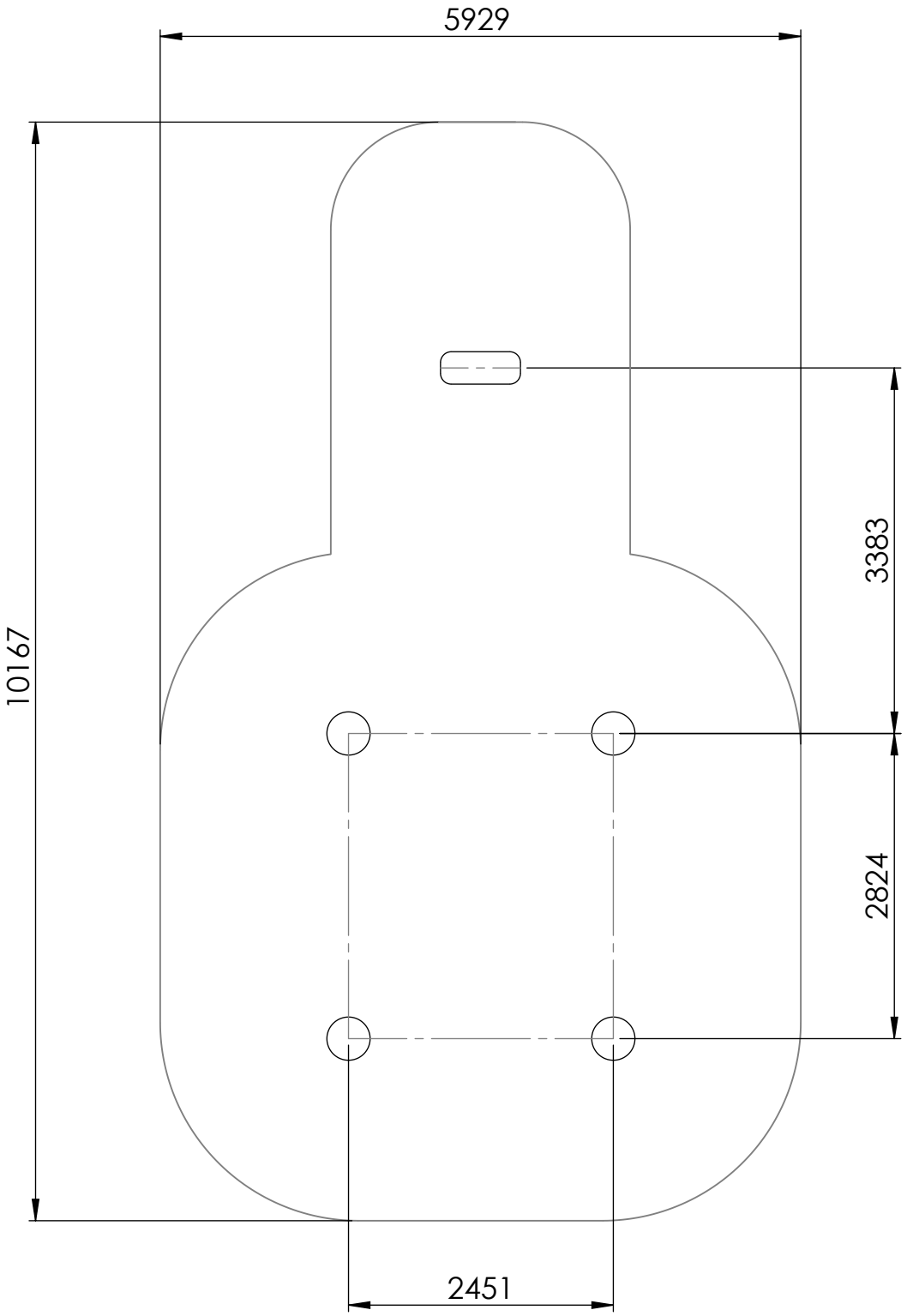

depth of foundation 600mm

UNLESS OTHERWISE SPECIFIED:
DIMENSIONS ARE IN MILLIMETERS
WEIGHT ARE IN KILOGRAMM

	NAME	SIGNATURE	DATE	REVISION
DRAWN	M. Rebase		18.05.2012	
APPV'D				

PART NUMBER / DWG NO.: AM005

DESCRIPTION: AMAZON foundation

MATERIAL: wood, metal, plastic

A4

WEIGHT:

SCALE: 1:60

SHEET 3 OF 6

Tiptiptap OÜ
Tiptiptap OÜ
Veetorni 9,
Jüri alevik, Rae vald,
75301 Harjumaa

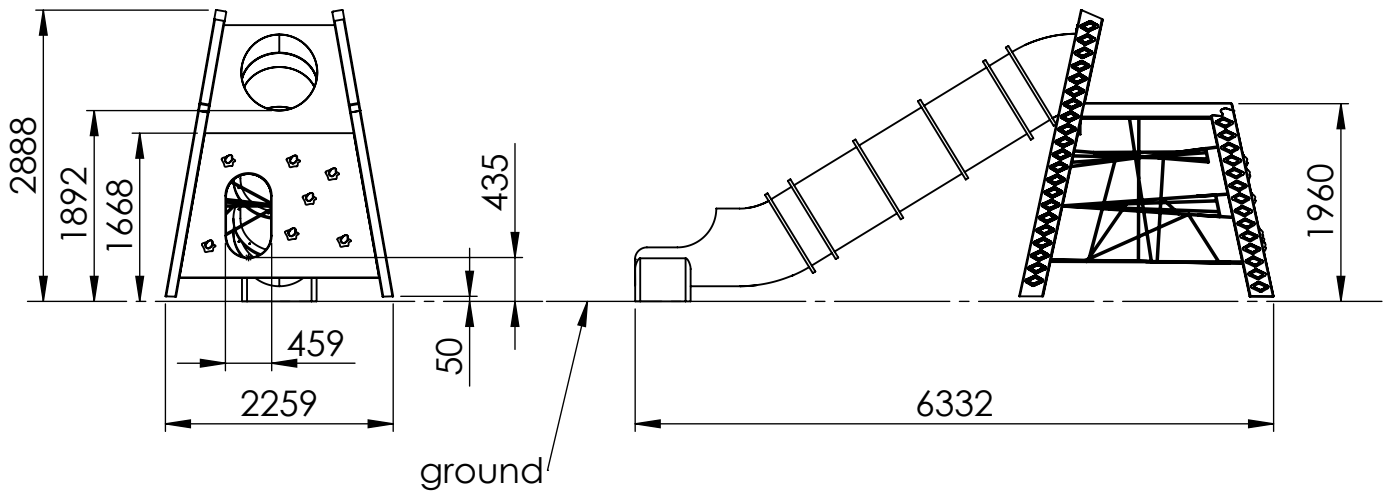

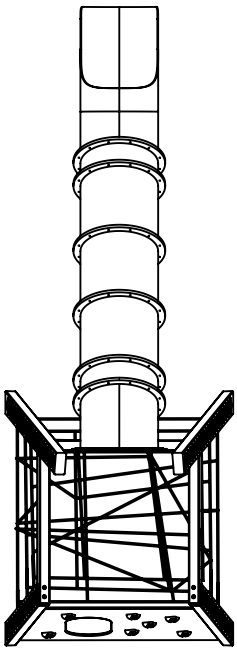

UNLESS OTHERWISE SPECIFIED: DIMENSIONS ARE IN MILLIMETERS WEIGHT ARE IN KILOGRAMM				
	NAME	SIGNATURE	DATE	REVISION
DRAWN	M. Rebase		18.05.2012	
APPV'D				

Tiptiptap OÜ
Tiptiptap OÜ
Veetorni 9,
Jüri alevik, Rae vald,
75301 Harjumaa

PART NUMBER / DWG NO.: AM005

DESCRIPTION: AMAZON

MATERIAL: wood, metal, plastic

A4

WEIGHT:

SCALE: 1:75

SHEET 4 OF 6

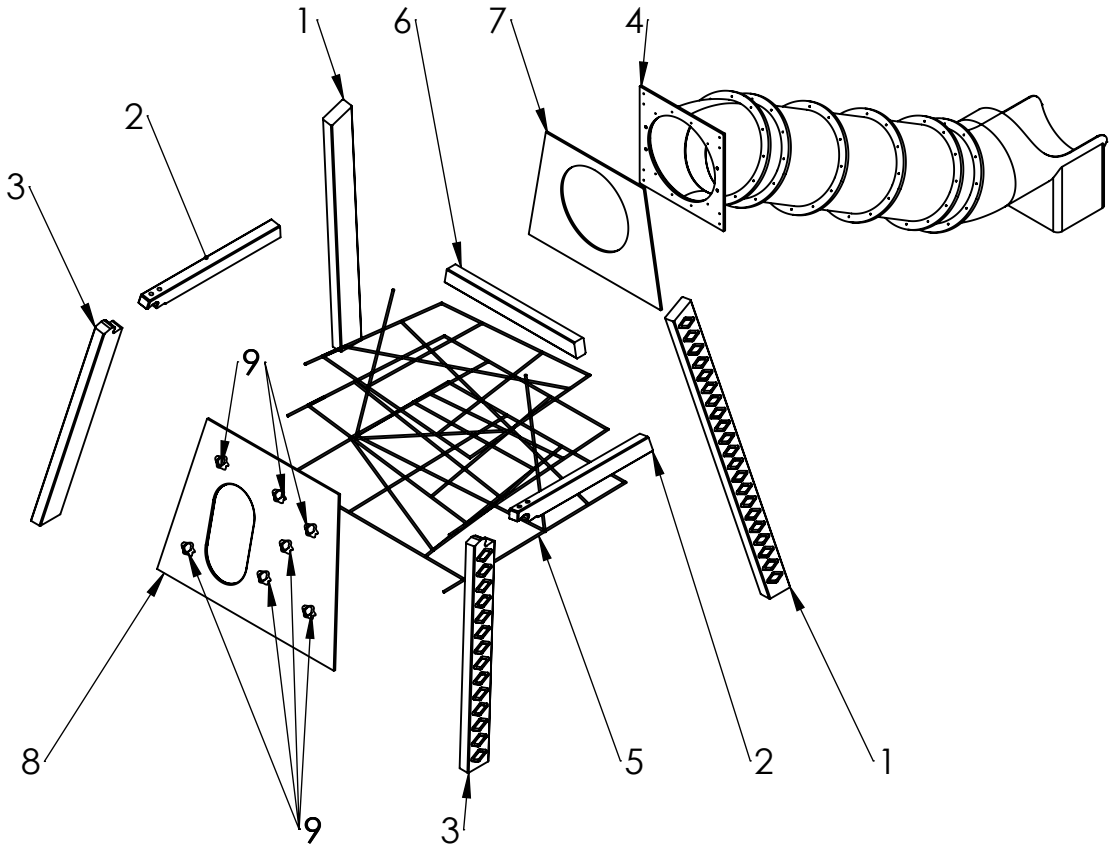

ITEM NO.	PART NUMBER	DESCRIPTION	QTY.
1	post 210x105x2950	laminated wood	2
2	beam 145x105x1510	laminated wood	2
3	post 210x105x1910	laminated wood	2
4	tube slide	PE plastic	1
5	climbing net	PP covered steel wire	1
6	beam 145x105x1480	laminated wood	1
7	panel 1480x1085	plywood	1
8	wall with climbing grips	plywood	1

UNLESS OTHERWISE SPECIFIED:
DIMENSIONS ARE IN MILLIMETERS
WEIGHT ARE IN KILOGRAMM

	NAME	SIGNATURE	DATE	REVISION
DRAWN	M. Rebase		18.05.2012	
APPV'D				

Tiptiptap OÜ
Tiptiptap OÜ
Veetorni 9,
Jüri alevik, Rae vald,
75301 Harjumaa

PART NUMBER / DWG NO.: AM005

DESCRIPTION: AMAZON

MATERIAL: wood, metal, plastic

A4

WEIGHT:

SCALE: 1:60

SHEET 5 OF 6

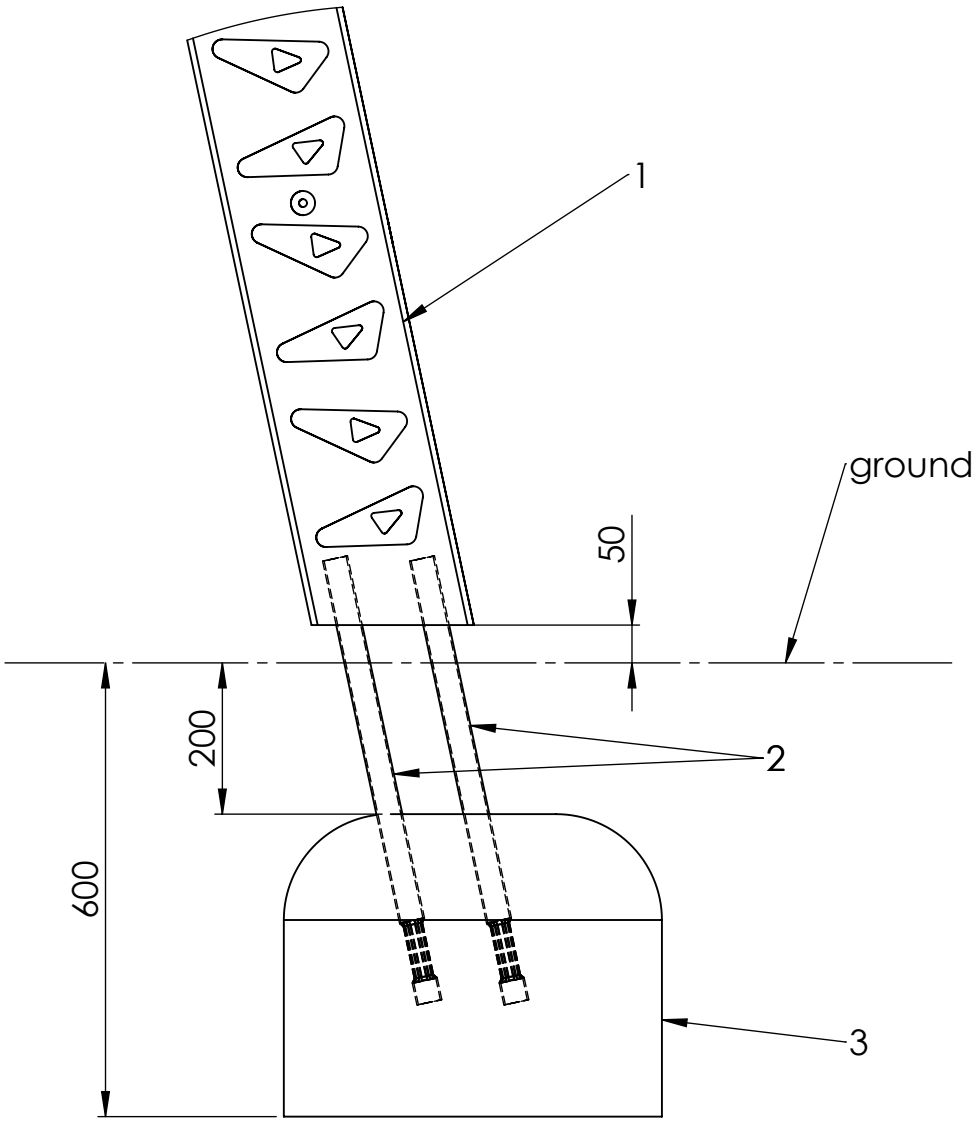

ITEM NO.	PART NUMBER
1	post 105x210
2	metal ground fixing
3	concrete

UNLESS OTHERWISE SPECIFIED:
DIMENSIONS ARE IN MILLIMETERS
WEIGHT ARE IN KILOGRAMM

	NAME	SIGNATURE	DATE	REVISION
DRAWN	M. Rebase			
APPV'D				

PART NUMBER / DWG NO.:
AM005

DESCRIPTION:
AMAZON
connecting metal ground fixing to post

MATERIAL:
wood, metal, plastic

A4

WEIGHT:

SCALE: 1:10

SHEET 6 OF 6

Tiptiptap OÜ
Tiptiptap OÜ
Veetorni 9,
Jüri alevik, Rae vald,
75301 Harjumaa